STRONG PARTNERS.
TOUGH TRUCKS.™

4-WHEEL ELECTRIC FORKLIFT TRUCKS

J2.2-3.5XN

2 200-3 500 KG

J2.2XN, J2.5XN, J3.0XN, J3.5XN ADVANCE

DISTINGUISHING MARKS	1.1	Manufacturer (abbreviation)		HYSTER		HYSTER		HYSTER	
	1.2	Manufacturer's type designition		J2.2XN		J2.5XN-717		J2.5XN-861	
		Model		Advance		Advance		Advance	
	1.3	Drive: electric (battery or mains), diesel, petrol, fuel gas		Electric (battery)		Electric (battery)		Electric (battery)	
	1.4	Operator type: hand, pedestrian, standing, seated, order-picker		Seated		Seated		Seated	
	1.5	Rated capacity / Rated load	Q (kg)	2200		2500		2500	
	1.6	Load centre distance	c (mm)	500		500		500	
	1.8	Load distance, centre of drive axle to fork	x (mm)	419		419		419	
	1.9	Wheelbase	y (mm)	1606		1606		1750	
WEIGHTS	2.1	Service weight ❒	kg	4520		4520		4930	
	2.2	Axle loading, laden front/rear ❒	kg	5739	977	6211	805	6283	1144
	2.3	Axle loading, unladen front/rear ❒	kg	2279	2236	2279	2236	2469	2458
TYRES / CHASSIS	3.1	Tyres: L = pneumatic, V = cushion, SE = Pneumatic Shape Solid		SE		SE		SE	
	3.2	Tyre size, front		23 x 10 - 12		23 x 10 - 12		23 x 10 - 12	
	3.3	Tyre size, rear		18 x 7 - 8		18 x 7 - 8		18 x 7 - 8	
	3.5	Wheels, number front/rear (x = driven wheels)		2X	2	2X	2	2X	2
	3.6	Tread, front *	b_{10} (mm)	938	1054	938	1054	938	1054
	3.7	Tread, rear	b_{11} (mm)	992		992		992	
DIMENSIONS	4.1	Tilt of mast/fork carriage forward/backward	α / β (°)	5	5	5	5	5	5
	4.2	Height, mast lowered	h_1 (mm)	2192		2192		2192	
	4.3	Free lift ¶	h_2 (mm)	100		100		100	
	4.4	Lift ¶	h_3 (mm)	3350		3350		3350	
	4.5	Height, mast extended ✦	h_4 (mm)	3960		3960		3960	
	4.7	Height of overhead guard (cabin) ■	h_6 (mm)	2193		2193		2193	
	4.7.1	Cab height (open cab)		2206		2206		2206	
	4.8	Seat height relating to SIP/stand height ✪	h_7 (mm)	1070		1070		1070	
	4.12	Coupling height	h_{10} (mm)	262		262		262	
	4.19	Overall length	l_1 (mm)	3336		3336		3480	
	4.20	Length to face of forks ⟐	l_2 (mm)	2336		2336		2480	
	4.21	Overall width *	b_1/b_2 (mm)	1173	1289	1173	1289	1173	1289
	4.22	Fork dimensions DIN ISO 2331	s/e/l (mm)	40 100 1000		40 100 1000		40 100 1000	
	4.23	Fork carriage ISO 2328, class/type A, B		2A		2A		2A	
	4.24	Fork carriage width ●	b_3 (mm)	1067		1067		1067	
	4.31	Ground clearance, laden, below mast	m_1 (mm)	83		83		83	
	4.32	Ground clearance, centre of wheelbase	m_2 (mm)	137		137		137	
	4.33	Load dimension $b_{12} \times l_6$ crossways	$b_{12} \times l_6$ (mm)	1200 x 1000		1200 x 1000		1200 x 1000	
	4.34	Aisle width predetermined load dimensions	A_{st} (mm)	3613		3613		3750	
	4.34.1	Aisle width for pallets 1000 × 1200 wide ◆	A_{st} (mm)	3613		3613		3750	
	4.34.2	Aisle width for pallets 800 × 1200 long ◆	A_{st} (mm)	3766		3766		3906	
	4.35	Turning radius	W_a (mm)	1931		1931		2073	
	4.36	Internal turning radius	b_{13} (mm)	173		173		189	
	4.41	90° intersecting aisle (With pallet W = 1200mm, L = 1000mm)	(mm)	1981		1981		2043	
	4.42	Step Height (from ground to running board) ★	(mm)	706 / 810		706 / 810		706 / 810	
	4.43	Step Height	(mm)	475		475		475	
PERFORMANCE DATA	5.1	Travel speed, laden / unladen △	km/h	18.0	18.0	18.0	18.0	18.0	18.0
	5.2	Lift speed, laden / unladen	m/sec	0.40	0.63	0.38	0.63	0.38	0.63
	5.3	Lowering speed, laden / unladen	m/sec	0.57	0.5	0.57	0.51	0.57	0.51
	5.5	Drawbar pull, laden / unladen, 60 minute rating **	N	5468	5773	5591	5726	5591	5726
	5.6	Maximum drawbar pull laden / unladen, 5 minute rating***	N	18045	19052	18451	18897	18451	18897
	5.7	Gradeability laden / unladen, 30 minute rating **** †	%	10	14	9	13	9	13
	5.8	Maximum gradeability laden / unladen *** †	%	26	39	24	35	24	35
	5.9	Acceleration time, laden / unladen 10m △	sec	4.42	4.11	4.45	4.11	4.45	4.11
	5.10	Service brake		Hydraulic		Hydraulic		Hydraulic	
ELECTRIC ENGINE	6.1	Drive motor rating S2 60 min	kW	2 x 10.0		2 x 10.0		2 x 10.0	
	6.2	Lift motor rating at S3 15%	kW	16.0		16.0		16.0	
	6.3	Battery according to DIN 43531/35/36 A, B, C, no		43536A		43536A		43536A	
	6.4	Battery voltage/nominal capacity K5	V/Ah	80	560	80	560	80	700
	6.5	Battery weight (min/max)	kg	1480	1635	1480	1635	1770	1956
	6.6	Energy consumption according to VDI cycle ⬟	kWh/h @Nr of Cycles	6.68		7.00		7.89	
ADDITIONAL DATA	8.1	Drive control		AC electronic		AC electronic		AC electronic	
	10.1	Operating pressure for attachments	bar	155		155		155	
	10.2	Oil volume for attachments ✧	l/min	20-40		20-40		20-40	
	10.3	Hydraulic oil tank, capacity	l	29.3		29.3		29.3	
	10.7	Sound pressure level at the driver's seat ✪	dB(A)	67		67		67	
	10.8	Towing coupling, type DIN		Pin		Pin		Pin	

Specification data is based on VDI 2198 * Standard / Wide tread ** 60 minute rating *** 5 minute rating **** 30 minute rating

HYSTER	HYSTER	1.1	DISTINGUISHING MARKS
J3.0XN	J3.5XN	1.2	
Advance	Advance		
Electric (battery)	Electric (battery)	1.3	
Seated	Seated	1.4	
3000	3500	1.5	
500	500	1.6	
431	431	1.8	
1750	1750	1.9	

					WEIGHTS
5000		5320		2.1	
7157	841	7871	942	2.2	
2560	2438	2508	2805	2.3	

					TYRES / CHASSIS
SE		SE		3.1	
23 x 10 - 12		23 x 10 - 12		3.2	
18 x 7 - 8		18 x 7 - 8		3.3	
2X	2	2X	2	3.5	
938	1054	938	1054	3.6	
992		992		3.7	

							DIMENSIONS
5	5		5	5		4.1	
2192			2192			4.2	
100			100			4.3	
3155			3155			4.4	
3865			3865			4.5	
2193			2193			4.7	
2206			2206			4.7.1	
1070			1070			4.8	
262			262			4.12	
3492			3570			4.19	
2492			2570			4.20	
1173	1289		1173	1289		4.21	
50	120	1000	50	120	1000	4.22	
3A			3A			4.23	
1067			1067			4.24	
83			83			4.31	
137			137			4.32	
1200 x 1000			1200 x 1000			4.33	
3762			3828			4.34	
3762			3828			4.34.1	
3918			3984			4.34.2	
2073			2139			4.35	
189			189			4.36	
2043			2076			4.41	
706 / 810			706 / 810			4.42	
475			475			4.43	

					PERFORMANCE DATA
17.0	18.0	16.0	18.0	5.1	
0.33	0.59	0.31	0.59	5.2	
0.56	0.46	0.58	0.46	5.3	
5441	5588	5478	5720	5.5	
17956	18441	18076	18875	5.6	
8	12	7	12	5.7	
22	34	20	32	5.8	
4.56	4.18	4.60	4.23	5.9	
Hydraulic		Hydraulic		5.10	

					ELECTRIC ENGINE
2 x 10.0		2 x 10.0		6.1	
16.0		16.0		6.2	
43536A		43536A		6.3	
80	700	80	700	6.4	
1770	1956	1770	1956	6.5	
8.66		10.03		6.6	

AC electronic	AC electronic	8.1	ADDITIONAL DATA
155	155	10.1	
20-40	20-40	10.2	
29.3	29.3	10.3	
67	67	10.7	
Pin	Pin	10.8	

EQUIPMENT & WEIGHT:
Weights (line 2.1) are based on the following specifications:
Complete truck with 3 390 mm (J2.5-2.5XN) or 3 200 mm (J3.0-3.5XN) 2-stage limited free lift mast, standard carriage and 1000 mm forks with load backrest with extended shift on with DIN battery configuration, standard seat and overhead guard and pneumatic shaped solid drive and steer tyres.

NOTE:

Specifications are affected by the condition of the vehicle and how it is equipped, as well as the nature and condition of the operating area. If these specifications are critical, the proposed application should be discussed with your dealer.

❒ Max. battery

¶ Bottom of forks

✦ Without load backrest

❍ Full suspension in compressed position specified. Add 40 mm for nominal position. Add 104 mm for battery side removal option

● Add 28 mm with load backrest

■ h_6 subject to +/- 5 mm tolerance. Add 20mm with cab option. Add 104mm for battery side removal option. Add 124mm for battery side removal with cab option

★ Vertical/horizontal battery removal

◈ With sideshift carriage add 32mm for J2.2XN - J2.5XN-717, 34mm for J2.5XN-861 LWB, 33mm for J3.0XN, 32mm for J3.5XN

◆ Stacking aisle width (lines 4.34.1 & 4.34.2) is based on the VDI standard calculation as shown on illustration. The British Industrial Truck Association recommends the addition of 100 mm to the total clearance (dimension a) for extra operating margin at the rear of the truck.

† Gradeability figures (lines 5.7 & 5.8) are provided for comparison of tractive performance, but are not intended to endorse the operation of the vehicle on the stated inclines. Follow instructions in the operating manual regarding operation on inclines.

△ HiP Performance settings

⬟ eLo Performance settings

✧ Maximum flow set through dash display.

✪ L_{PAZ}, measured according to the test cycles and based on the weighting values contained in EN12053

TABLES KEY:

✤ Add 666mm with load backrest extension.

❍ Deduct 666mm with load backrest extension.

➞ Add 684mm with load backrest extension

✖ Deduct 684mm with load backrest extension.

◗ Add 583mm with load backrest extension.

▲ Deduct 583mm with load backrest extension.

➥ Add 601mm with load backrest extension.

✱ Deduct 601mm with load backrest extension.

❒ Nominal Battery compartment length.

- Wide tread required. Standard tread possible but with reduced capacity. Contact your lift truck dealer

↘ Alternative capacities available with pneumatic tyres. Contact your lift truck dealer.

◁ Max fork height = h_3+s

◈ Freelift (top of forks) = h_2+s

NOTICE

Care must be exercised when handling elevated loads. When the carriage and/or load is elevated, truck stability is reduced. It is important that mast tilt in either direction be kept to a minimum when loads are elevated

Operators must be trained and adhere to the instructions contained in the Operating Manual.

Hyster products are subject to change without notice. Lift trucks illustrated may feature optional equipment.

CE Safety:

This truck conforms to the current EU requirements.

J2.2XN, J2.5XN, J3.0XN, J3.5XN ADVANCE+

DISTINGUISHING MARKS	1.1	Manufacturer (abbreviation)		HYSTER			HYSTER			HYSTER	
	1.2	Manufacturer's type designition		J2.2XN			J2.5XN-717			J2.5XN-861	
		Model		Advance+			Advance+			Advance+	
	1.3	Drive: electric (battery or mains), diesel, petrol, fuel gas		Electric (battery)			Electric (battery)			Electric (battery)	
	1.4	Operator type: hand, pedestrian, standing, seated, order-picker		Seated			Seated			Seated	
	1.5	Rated capacity / Rated load	Q (kg)	2200			2500			2500	
	1.6	Load centre distance	c (mm)	500			500			500	
	1.8	Load distance, centre of drive axle to fork	x (mm)	419			419			419	
	1.9	Wheelbase	y (mm)	1606			1606			1750	
WEIGHTS	2.1	Service weight ❒	kg	4670			4870			4860	
	2.2	Axle loading, laden front/rear ❒	kg	5640	1224		6114	1254		6183	1167
	2.3	Axle loading, unladen front/rear ❒	kg	2018	2646		1805	3063		2067	2783
TYRES / CHASSIS	3.1	Tyres: L = pneumatic, V = cushion, SE = Pneumatic Shape Solid		SE			SE			SE	
	3.2	Tyre size, front		23 x 10 - 12			23 x 10 - 12			23 x 10 - 12	
	3.3	Tyre size, rear		18 x 7 - 8			18 x 7 - 8			18 x 7 - 8	
	3.5	Wheels, number front/rear (x = driven wheels)		2X	2		2X	2		2X	2
	3.6	Tread, front *	b_{10} (mm)	938	1054		938	1054		938	1054
	3.7	Tread, rear	b_{11} (mm)	992			992			992	
DIMENSIONS	4.1	Tilt of mast/fork carriage forward/backward	α / β (°)	5	5		5	5		5	5
	4.2	Height, mast lowered	h_1 (mm)	2192			2192			2192	
	4.3	Free lift ¶	h_2 (mm)	100			100			100	
	4.4	Lift ¶	h_3 (mm)	3350			3350			3350	
	4.5	Height, mast extended ✦	h_4 (mm)	3960			3960			3960	
	4.7	Height of overhead guard (cabin) ■	h_6 (mm)	2193			2193			2193	
	4.7.1	Cab height (open cab)		2206			2206			2206	
	4.8	Seat height relating to SIP/stand height ✪	h_7 (mm)	1070			1070			1070	
	4.12	Coupling height	h_{10} (mm)	262			262			262	
	4.19	Overall length	l_1 (mm)	3336			3336			3480	
	4.20	Length to face of forks ⟐	l_2 (mm)	2336			2336			2480	
	4.21	Overall width *	b_1/b_2 (mm)	1173	1289		1173	1289		1173	1289
	4.22	Fork dimensions DIN ISO 2331	s/e/l (mm)	40	100	1000	40	100	1000	40	100	1000
	4.23	Fork carriage ISO 2328, class/type A, B		2A			2A			2A	
	4.24	Fork carriage width ●	b_3 (mm)	1067			1067			1067	
	4.31	Ground clearance, laden, below mast	m_1 (mm)	83			83			83	
	4.32	Ground clearance, centre of wheelbase	m_2 (mm)	137			137			137	
	4.33	Load dimension $b_{12} \times l_6$ crossways	$b_{12} \times l_6$ (mm)	1200 x 1000			1200 x 1000			1200 x 1000	
	4.34	Aisle width predetermined load dimensions	A_{st} (mm)	3613			3613			3750	
	4.34.1	Aisle width for pallets 1000 × 1200 wide ◆	A_{st} (mm)	3613			3613			3750	
	4.34.2	Aisle width for pallets 800 × 1200 long ◆	A_{st} (mm)	3766			3766			3906	
	4.35	Turning radius	W_a (mm)	1931			1931			2073	
	4.36	Internal turning radius	b_{13} (mm)	173			173			189	
	4.41	90° intersecting aisle (With pallet W = 1200mm, L = 1000mm)	(mm)	1981			1981			2043	
	4.42	Step Height (from ground to running board) ★	(mm)	706 / 810			706 / 810			706 / 810	
	4.43	Step Height	(mm)	475			475			475	
PERFORMANCE DATA	5.1	Travel speed, laden / unladen △	km/h	21.0	21.0		21.0	21.0		21.0	21.0
	5.2	Lift speed, laden / unladen	m/sec	0.52	0.72		0.49	0.72		0.49	0.72
	5.3	Lowering speed, laden / unladen	m/sec	0.57	0.51		0.57	0.51		0.57	0.51
	5.5	Drawbar pull, laden / unladen, 60 minute rating **	N	6015	6235		6037	6185		6037	6185
	5.6	Maximum drawbar pull laden / unladen, 5 minute rating***	N	19849	20576		19927	20409		19927	20409
	5.7	Gradeability laden / unladen, 30 minute rating **** †	%	11	16		10	14		10	14
	5.8	Maximum gradeability laden / unladen *** †	%	28	42		26	38		26	38
	5.9	Acceleration time, laden / unladen 10m △	sec	4.04	3.71		4.04	3.71		4.04	3.71
	5.10	Service brake		Hydraulic			Hydraulic			Hydraulic	
ELECTRIC ENGINE	6.1	Drive motor rating S2 60 min	kW	2 x 10.0			2 x 10.0			2 x 10.0	
	6.2	Lift motor rating at S3 15%	kW	24.0			24.0			24.0	
	6.3	Battery according to DIN 43531/35/36 A, B, C, no		43536A			43536A			43536A	
	6.4	Battery voltage/nominal capacity K5	V/Ah	80	560		80	560		80	700
	6.5	Battery weight (min/max)	kg	1480	1635		1480	1635		1770	1956
	6.6	Energy consumption according to VDI cycle △	kWh/h @Nr of Cycles	7.51			7.87			8.86	
ADDITIONAL DATA	8.1	Drive control		AC electronic			AC electronic			AC electronic	
	10.1	Operating pressure for attachments	bar	155			155			155	
	10.2	Oil volume for attachments ✧	l/min	20-40			20-40			20-40	
	10.3	Hydraulic oil tank, capacity	l	29.3			29.3			29.3	
	10.7	Sound pressure level at the driver's seat ✪	dB(A)	68			68			68	
	10.8	Towing coupling, type DIN		Pin			Pin			Pin	

Specification data is based on VDI 2198 * Standard / Wide tread ** 60 minute rating *** 5 minute rating **** 30 minute rating

TRUCK DIMENSIONS

HYSTER	HYSTER		
		1.1	DISTINGUISHING MARKS
J3.0XN	J3.5XN	1.2	
Advance+	Advance+		
Electric (battery)	Electric (battery)	1.3	
Seated	Seated	1.4	
3000	3500	1.5	
500	500	1.6	
431	431	1.8	
1750	1750	1.9	
5300	5370	2.1	WEIGHTS
7055 / 1244	7752 / 1115	2.2	
2090 / 3209	2209 / 3158	2.3	
SE	SE	3.1	TYRES / CHASSIS
23 x 10 - 12	23 x 10 - 12	3.2	
18 x 7 - 8	18 x 7 - 8	3.3	
2X / 2	2X / 2	3.5	
938 / 1054	938 / 1054	3.6	
992	992	3.7	
5 / 5	5 / 5	4.1	DIMENSIONS
2192	2192	4.2	
100	100	4.3	
3155	3155	4.4	
3865	3865	4.5	
2193	2193	4.7	
2206	2206	4.7.1	
1070	1070	4.8	
262	262	4.12	
3492	3570	4.19	
2492	2570	4.20	
1173 / 1289	1173 / 1289	4.21	
50 / 120 / 1000	50 / 120 / 1000	4.22	
3A	3A	4.23	
1067	1067	4.24	
83	83	4.31	
137	137	4.32	
1200 x 1000	1200 x 1000	4.33	
3762	3828	4.34	
3762	3828	4.34.1	
3918	3984	4.34.2	
2073	2139	4.35	
189	189	4.36	
2043	2076	4.41	
706 / 810	706 / 810	4.42	
475	475	4.43	
19.5 / 21.0	18.0 / 21.0	5.1	PERFORMANCE DATA
0.42 / 0.63	0.37 / 0.63	5.2	
0.56 / 0.46	0.58 / 0.46	5.3	
5877 / 6035	5918 / 6177	5.5	
19393 / 19916	19522 / 20385	5.6	
9 / 13	8 / 13	5.7	
24 / 37	22 / 35	5.8	
4.14 / 3.78	4.19 / 3.83	5.9	
Hydraulic	Hydraulic	5.10	
2 x 10.0	2 x 10.0	6.1	ELECTRIC ENGINE
24.0	24.0	6.2	
43536A	43536A	6.3	
80 / 700	80 / 700	6.4	
1770 / 1956	1770 / 1956	6.5	
8.66	10.03	6.6	
AC electronic	AC electronic	8.1	ADDITIONAL DATA
155	155	10.1	
20-40	20-40	10.2	
29.3	29.3	10.3	
68	68	10.7	
Pin	Pin	10.8	

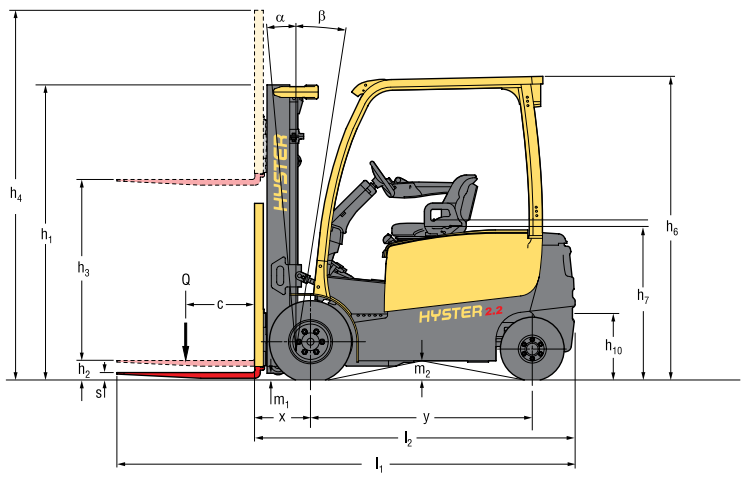

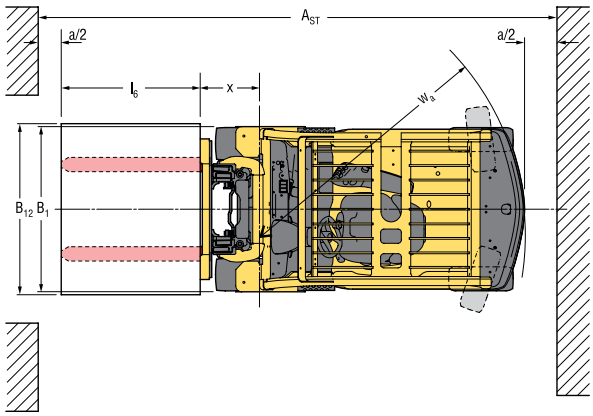

◔ = Centre of gravity of unladen truck

Ast = Wa + R + a (see lines 4.34.1 & 4.34.2)

$$R = \sqrt{(l_6 + x)^2 + \left(\frac{b_{12} - b_{13}}{2}\right)^2}$$

a = Minimum operating clearance (VDI standard = 200 mm BITA recommendation = 300 mm)

l_6 = Load length

RATED CAPACITIES

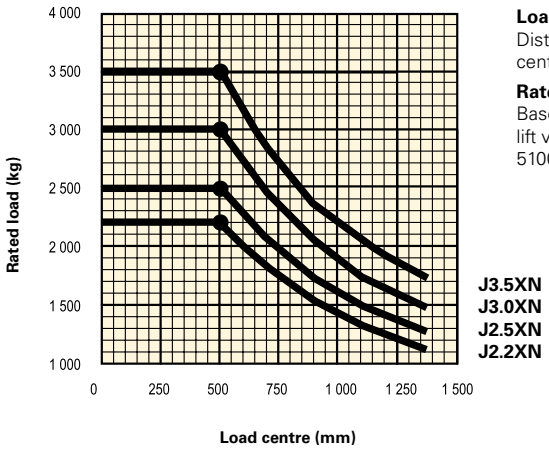

Load centre
Distance from front forks to centre of gravity of load.

Rated load
Based on 3-Stage full free lift vertical masts up to 5100mm bottom of forks.

EQUIPMENT & WEIGHT:
Weights (line 2.1) are based on the following specifications:
Complete truck with 3 390 mm (J2.5-2.5XN) or 3 200 mm (J3.0-3.5XN) 2-stage limited free lift mast, standard carriage and 1000 mm forks with load backrest with extended shift on with DIN battery configuration, standard seat and overhead guard and pneumatic shaped solid drive and steer tyres.

MAST AND CAPACITY INFORMATION

Values shown are for standard equipment. When using non-standard equipment these values may change. Please contact your Hyster dealer for information.

VISTA MASTS J2.2-2.5OXN

	Maximum Fork Height ◁ (mm) (h_3 + s)	Back Tilt	Overall Lowered Height (mm)	Overall Extended Height (mm)	Free lift (top of forks) ◈ (mm) (h_2 + s)
Vista 2-Stage limited free lift	3390 3790 4330 4830	5° 5° 5° 5°	2195 2395 2745 2995	3956 ✥ 4356 ✥ 4896 ✥ 5396 ✥	140 140 140 140
Vista 2-Stage full free lift	3400	5°	2195	3966 ✥	1625 ❍
Vista 3-Stage limited free lift	4950 5550 6000	5° 5° 5°	2145 2395 2595	5496 → 6096 → 6546 →	1595 ✖ 1845 ✖ 2045 ✖

VISTA MASTS J3.0-3.5XN

	Maximum Fork Height ◁ (mm) (h_3 + s)	Back Tilt	Overall Lowered Height (mm)	Overall Extended Height (mm)	Free lift (top of forks) ◈ (mm) (h_2 + s)
Vista 2-Stage limited free lift	3200 3600 4100 4600	5° 5° 5° 5°	2195 2395 2745 2990	3861 ◗ 4261 ◗ 4761 ◗ 5261 ◗	145 145 145 145
Vista 2-Stage full free lift	3205	5°	2195	3862 ◗	1535 ▲
Vista 3-Stage limited free lift	4610 4910 5210 5810	5° 5° 5° 5°	2145 2295 2395 2645	5252 ← 5552 ← 5852 ← 6452 ←	1500 ✱ 1650 ✱ 1750 ✱ 2000 ✱

J2.2-3.5XN - capacity chart in kg @ 500 mm load centres

	Pneumatic Shaped Solid Tyres											
	Maximum fork height ◁ (mm) (h_3 + s)	WITHOUT sideshift			WITH integral sideshift			Maximum fork height ◁ (mm) (h_3 + s)	WITHOUT sideshift		WITH integral sideshift	
		J2.2XN 717 ❒	J2.5XN 717 ❒	J2.5XN 861 ❒	J2.2XN 717 ❒	J2.5XN 717 ❒	J2.5XN 861 ❒		J3.0XN 861 ❒	J3.5XN 861 ❒	J3.0XN 861 ❒	J3.5XN 861 ❒
Vista 2-Stage limited free lift	**3390** **3790** **4330** **4830**	2200 2200 2200 2200	2500 2500 2500 2480	2500 2500 2500 2500	2200 2200 2200 2190	2490 2490 2470 2440	2500 2500 2500 2500	**3200** **3600** **4100** **4600**	3000 3000 3000 2920	3500 3500 3500 3410	2960 2950 2940 2850	3440 3430 3420 3330
Vista 2-Stage full free lift	**3400**	2200	2500	2500	2200	2500	2500	**3205**	3000	3500	2960	3440
Vista 3-Stage full free lift	**4950** **5550** **6000**	2200 2110 2020	2440 2310 2210	2500 2410 2310	2180 2070 1980	2400 2250 2150	2500 2380 2290	**4610** **4910** **5210** **5810**	2970 2900 2840 2690	3460 3400 3320 ▪ 3170 ▪	2900 2830 2760 2600	3370 3300 3220 ▪ 3060 ▪

J2.2-3.5XN - capacity chart in kg @ 600 mm load centres

	Pneumatic Shaped Solid Tyres											
	Maximum fork height ◁ (mm) (h_3 + s)	WITHOUT sideshift			WITH integral sideshift			Maximum fork height ◁ (mm) (h_3 + s)	WITHOUT sideshift		WITH integral sideshift	
		J2.2XN 717 ❒	J2.5XN 717 ❒	J2.5XN 861 ❒	J2.2XN 717 ❒	J2.5XN 717 ❒	J2.5XN 861 ❒		J3.0XN 861 ❒	J3.5XN 861 ❒	J3.0XN 861 ❒	J3.5XN 861 ❒
Vista 2-Stage limited free lift	**3390** **3790** **4330** **4830**	2000 2000 2000 2000	2270 2270 2270 2250	2270 2270 2270 2270	2000 2000 1990 1980	2250 2250 2240 2210	2270 2270 2270 2270	**3200** **3600** **4100** **4600**	2720 2720 2720 2650	3130 3130 3130 3090	2680 2670 2660 2580	3110 3100 3090 3010
Vista 2-Stage full free lift	**3400**	2000	2270	2270	2000	2260	2270	**3205**	2720	3130	2680	3110
Vista 3-Stage full free lift	**4950** **5550** **6000**	2000 1920 1830	2210 2100 2000	2270 2190 2100	1970 1870 1790	2170 2030 1940	2250 2150 2070	**4610** **4910** **5210** **5810**	2690 2630 2570 2440	3130 3080 3010 ▪ 2870 ▪	2620 2560 2500 2350	3050 2980 2920 ▪ 2760 ▪

NOTE: To calculate truck capacities with alternative truck specifications to the ones shown in the above tables, please consult your Hyster dealer. The rated capacities shown are for masts in a vertical position on trucks equipped with standard or sideshift carriage and nominal length forks. Masts above the maximum fork heights shown in the mast table are classified as high lift and, depending on the tyre/tread configuration may require reduced capacity, restricted back tilt or wide tread.

PRODUCT FEATURES

The Hyster J2.2-3.5XN series is available in 2 configurations – Advance & Advance+.

With enhanced performance characteristics, the Advance+ configuration has been designed to operate in intensive, high productivity applications with long runs and high lifts as an effective alternative to an engine-powered truck.

For example, in comparison to the Advance configuration, top speed (laden) has been increased to up to 21 km/h with faster acceleration and lifting speeds have been increased by 27%.

DEPENDABILITY

- Redesigned mast incorporates new chain placement and hose routings that maximise fork visibility for the driver and reliable, high performance lifting.
- AC motor technology on traction and hoist, with built in thermal management system, allows the truck to work reliably over long runs and in demanding work cycles, reducing downtime significantly.
- The electrical system features a CANbus communications network and Hall Effect sensors for increased reliability.
- IP54 enclosed traction motors and IP65 protection of controls and all electrical connections prevents ingress of water and dust particles, reducing the probability of truck downtime.

PRODUCTIVITY

- Dual 10 kW AC front wheel traction motors deliver smooth acceleration, fast travel and rapid direction changes. This is combined with regenerative braking and a powerful hoist motor to deliver efficient load handling in the toughest of applications.
- Designed to offer excellent manoeuvrability in working aisles, speeding up throughput, the truck features a slim counterweight, Zero Turn Radius (ZTR) steer axle and dual drive motors.
- The maintenance-free mechanical Hyster Stability Mechanism (HSM) reduces truck lean when travelling over obstacles, increasing driver confidence and productivity.
- Extended battery shift life with choice of battery configurations and new horizontal battery extraction options fitted with fork pockets and removable side panels, manages energy efficiently.

ERGONOMICS

- The ergonomically designed operator compartment provides a comfortable and highly productive environment for the driver.
- The fully adjustable tilt steering column with telescopic adjustment, memory tilt and synchronised steering options allows the operator to get on and off the truck quickly and easily throughout the shift, ensuring maximum comfort and increased productivity.
- The TouchPoint™ mini-lever module armrest with built in hydraulic controls, integrated directional control, emergency off switch and horn offers the ultimate in comfort and control. Alternatively, seat-side manual levers also provide handling ease.
- A 'Heads-up' display keeps the driver's field of vision clear but provides him with 'at a glance' information on truck operating conditions or performance settings.
- A choice of weather protection options promotes a comfortable working environment, whatever the conditions.

LOW COST OF OWNERSHIP

- The Vehicle System Manager (VSM) allows adjustment of truck performance parameters and monitors key functions, leading to application matched performance and minimum downtime.
- Durable, quality components, including virtually maintenance free oil immersed brakes and brushless AC motors offer long term reliability and lower maintenance costs.
- In-built thermal protection on traction motors and advanced cooling system protect truck components, leading to reduced maintenance costs.
- New horizontal battery extraction options fitted with fork pockets and removable side panels providing easy battery extraction. Hyster offers a battery change system to suit the infrastructure available at the application site.

SERVICEABILILTY

- Standard 1 000 hour service interval.
- Access to diagnostic information via dash display with or plug-in port and laptop. This functionality saves technician time when setting up multiple items.
- Easily removable two-piece floor plate provides easy access to power contactor, traction controller fuses and relays.
- Motor, pump, controller and oil tank are located in the counterweight and are easily accessible, requiring only 2 thumb screws to be removed.
- LED master, indicator, brake and back-up lights are designed to last the lifetime of the truck.

STRONG PARTNERS. TOUGH TRUCKS.™
FOR DEMANDING OPERATIONS, EVERYWHERE.

Hyster supplies a complete range of warehouse equipment, IC and electric counterbalanced trucks, container handlers and reach stackers. Hyster is committed to being much more than a lift truck supplier.

Our aim is to offer a complete partnership capable of responding to the full spectrum of material handling issues: Whether you need professional consultancy on your fleet management, fully qualified service support, or reliable parts supply, you can depend on Hyster.

Our network of highly trained dealers provides expert, responsive local support. They can offer cost-effective finance packages and introduce effectively managed maintenance programmes to ensure that you get the best possible value. Our business is dealing with your material handling needs so you can focus on the success of your business today and in the future.

HYSTER EUROPE

Centennial House, Frimley Business Park, Frimley, Surrey, GU16 7SG, England.

Tel: +44 (0) 1276 538500

www.hyster.eu **infoeurope@hyster.com** **/HysterEurope** **@HysterEurope** **/HysterEurope**

Printed in The Netherlands. Part number: 3990057 Rev07-06/16-TLC