E45-70XN

4-WHEEL ELECTRIC FORKLIFT TRUCK CUSHION TIRE

PRODUCT TECHNICAL GUIDE

HYSTER

WWW.HYSTER.COM

E45-70XN DIMENSIONS

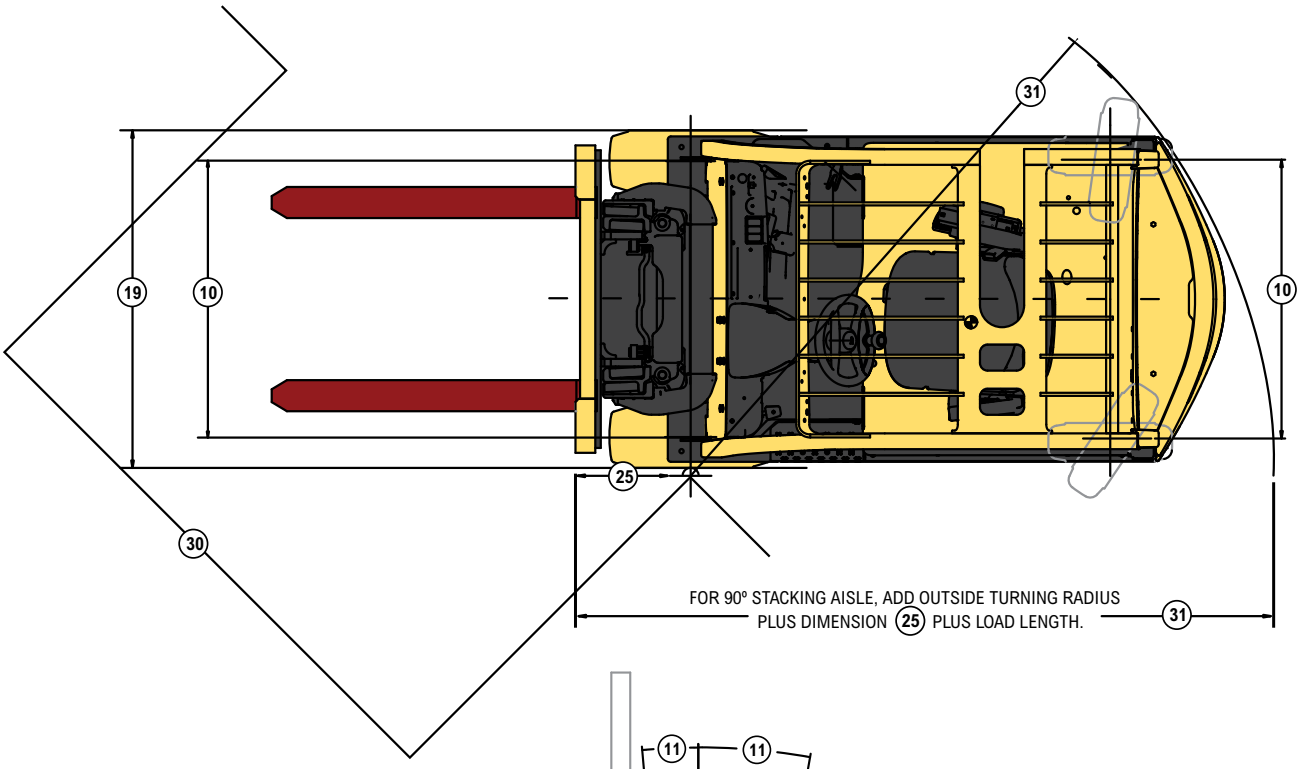

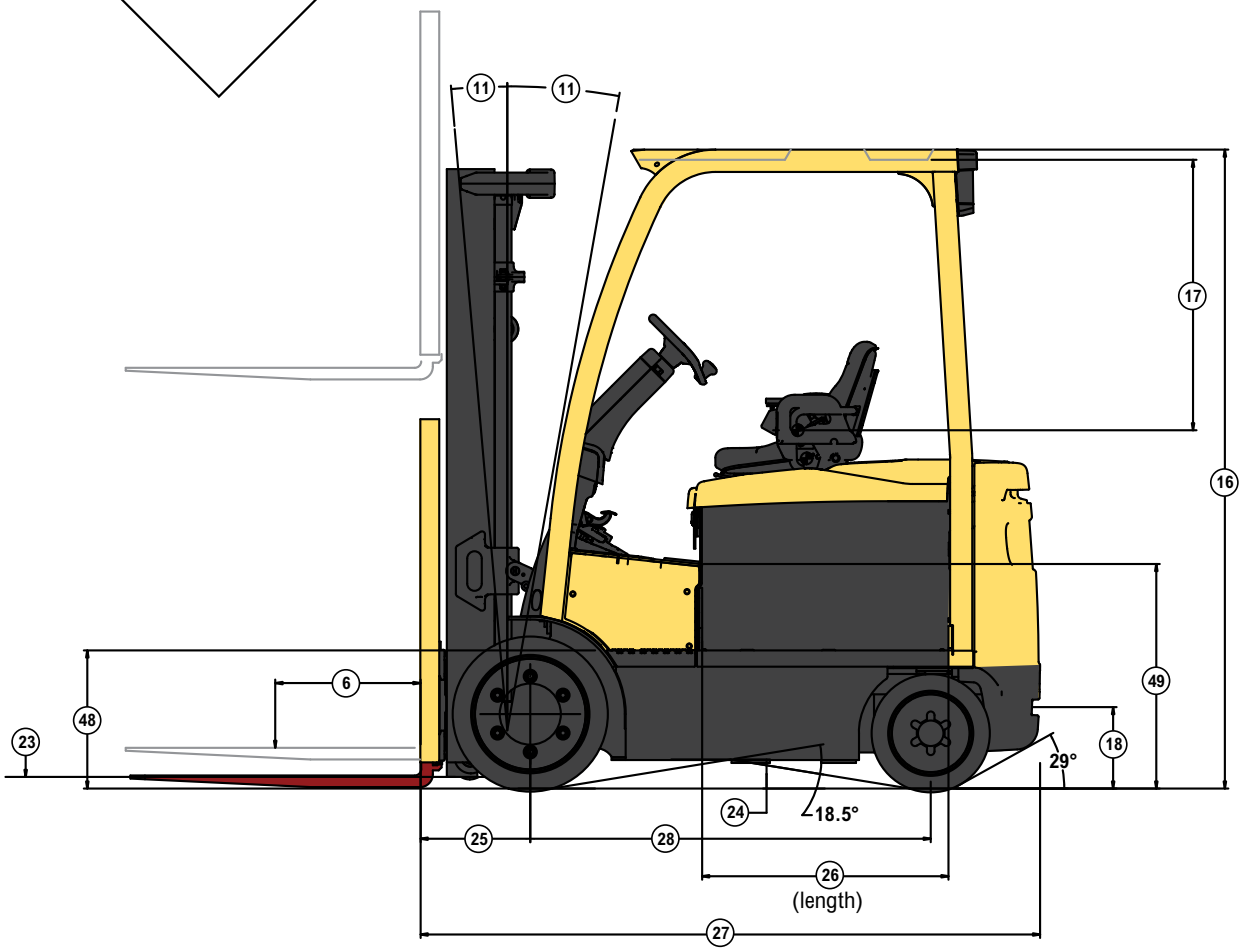

Circled dimensions correspond to the line numbers on the tabulated chart inside the technical guide.
Dimensions are in inches (millimeters).

E45XN SPECIFICATIONS

GENERAL	1	Manufacturer				Hyster		
	2	Model designation				E45XN		
	3	Power				Electric		
	4	Operation				Sit		
	5	Rated capacity			lb (kg)	4500 (2041)		
	6	Load center			in (mm)	24 (610)		
TIRES	7	Tire type - cushion, solid, pneumatic, etc.		Drive/steer		Cushion/cushion		
	8	Tire size		Drive/steer	in	21 x 7 x 15 / 16 x 5 x 10.5		
	9	Wheels - number	X=driven	Drive/steer		2x/2		
	10	Tread	Tires	Std dr/wide dr/steer	in (mm)	35.1/41.9/37 (892/1064/940)		
DIMENSIONS	11	Mast tilt		Std opt opt	degrees	5F/5B 10F/5B (5F/4B)		
	12	Mast - lowered height		Std mast	in (mm)	83 (2085)		
	13	Free lift - top of fork	Std 2-stg limited free lift mast		in (mm)	5 (140)		
		Opt 2-stg full free lift mast with/without LBR			in (mm)	33/60(860/1525)		
	14	Lift height - top of fork	Std 2-stg limited free lift mast		in (mm)	125 (3192)		
	15	Mast - extended height	Std mast with/without LBR		in (mm)	174/148 (4415/3740)		
	16	Overhead guard height	Std/drive in rack/opt/opt flat plate		in (mm)	88.5/88.5/86.5/84.1 (2248/2248/2197/2137)		
	17	Sip to bottom std OHG	Susp at mid-point	Std/susp/swivel	in (mm)	38.3/37.4/37.3 (975/950/948)		
	18	Tow pin height	Vertical center of pin		in (mm)	11 (280)		
	19	Overall width	Standard tread/wide tread		in (mm)	42.1/48.9 (1070/1242)		
	20	Forks	Thickness x width x length		in (mm)	1.6 x 3.9 x 42 (40 x 100 x 1067)		
	21	Standard carriage width		Class II	in (mm)	38.5 (977)		
	22	Floor to top of battery rollers			in (mm)	17.2 (436)		
	23	Ground clearance	Lowest point	NI/RL	in (mm)	3.6/3.3 (91/85)		
	24	Ground clearance	Center of truck	NI/RL	in (mm)	3.9/3.6 (98/92)		
	25	Load distance	Center of wheel to face of forks		in (mm)	15.4 (390)		
	26	Battery compartment	Height	Without/with battery rollers	in (mm)	23.9/23.3 (607/593)		
			Width		in (mm)	39.1 (992)		
				Nominal	SIZE	27"	30"	33"
			Length	Actual	in (mm)	27.6 (700)	30.9 (786)	33.3 (847)
	27	Length to face of forks	Chassis length		in (mm)	79.4 (2016)	82 (2082)	84.3 (2143)
	28	Wheelbase			in (mm)	48.4 (1230)	51.8 (1316)	54.2 (1377)
	29	Right angle stack			in (mm)	131.7 (3344)	135.2 (3434)	137.5 (3493)
	30	Equal aisle	90˚ Intersecting aisle		in (mm)	71.7 (1822)	72.3 (1836)	73.1 (1858)
	31	Outside turning radius			in (mm)	68.3 (1735)	71.9 (1825)	74.2 (1884)
WT.	32	Truck weight	Without battery	NL	lb (kg)	6620 (3003)	6240 (2830)	6280 (2849)
	33	Axle loading - drive	Static w/ max. wt. battery	NL/RL	lb (kg)	3945/12102 (1789/5489)	4189/12107 (1900/5492)	4386/12152 (1989/5512)
	34	Axle loading - steer	Static w/ max. wt. battery	NL/RL	lb (kg)	5968/2311 (2707/1048)	5556/2138 (2520/970)	5796/2529 (2629/1147)

PERFORMANCE						STANDARD PERFORMANCE		POWERPLUS PERFORMANCE	
					VOLTS	36	48	48	80
	36	Travel speed	Extended shift off	NL/RL	mph (km/h)	10.9/9.9 (17.6/15.9)	11.3/11.3 (18.2/18.2)	12.3/12.8 (19.8/20.6)	12.3/12.5 (19.8/20.1)
			Extended shift on	NL/RL	mph (km/h)	9.8/8.8 (15.8/14.2)	10.7/9.9 (17.2/15.9)	12.2/12.4 (19.7/19.9)	12.2/12.3 (19.7/19.8)
	37	Lift speed	Std 2-stg LFL mast	NL/RL	ft/min (m/sec)	100/59 (0.51/0.3)	124/79 (0.63/0.4)	142/102 (0.72/0.52)	142/102 (0.72/0.52)
			Opt 2-stg FFL mast	NL/RL	ft/min (m/sec)	93/59 (0.47/0.3)	124/81 (0.63/0.41)	130/98 (0.66/0.5)	130/98 (0.66/0.5)
			Opt 3-stg FFL mast	NL/RL	ft/min (m/sec)	94/59 (0.48/0.3)	124/79 (0.63/0.4)	134/100 (0.68/0.51)	134/100 (0.68/0.51)
			Opt 4-stg FFL mast	NL/RL	ft/min (m/sec)	96/59 (0.49/0.3)	0.67/79 (0.63/0.4)	136/100 (0.69/0.51)	136/100 (0.69/0.51)
	38	Lower speed	Std 2-stg LFL mast	NL/RL	ft/min (m/sec)	100/112 (0.51/0.57)			
			Opt 2-stg FFL mast	NL/RL	ft/min (m/sec)	91/102 (0.46/0.52)			
			Opt 3-stg FFL mast	NL/RL	ft/min (m/sec)	93/106 (0.47/0.54)			
			Opt 4-stg FFL mast	NL/RL	ft/min (m/sec)	77/89 (0.39/0.45)			
	39	Gradeability	5 minute rating	NL/RL	%	39/23	40/25	39/27	39/34
			60 minute rating	NL/RL	%	14/8	15/9	25/16	32/20
	40	Drawbar pull	5 minute rating	NL/RL	LBF	3373/3202	3486/3306	3773/3946	3773/4968
			60 minute rating	NL/RL	LBF	1317/1178	1402/1262	2545/2375	3208/3026
	41	Brake	Method of control	Service/parking		Hydraulic/mechanical			
			Method of operation	Service/parking		Foot/foot			
ELECTRIC	42	Battery	Type			Lead acid | Thin Plate Pure Lead* | Lithium-ion*			
						STANDARD PERFORMANCE		POWERPLUS PERFORMANCE	
					VOLTS	36	48	48	80
	43	Traction motor	60 minute rating		hp (kW)	24.7 (18.4)	24.7 (18.4)	31.6 (23.6)	31.6 (23.6)
	44	Pump motor	15% rating		hp (kW)	16.6 (12.4)	22.4 (16.7)	31.8 (23.7)	32.2 (24)
	45	Traction motor	Type/control method			AC/transistor			
	46	Pump motor	Type/control method			AC/transistor			
	47	Number of speeds	Traction/pump			Infinitely variable/infinitely variable			
OTHER	48	Step height			in (mm)	18.7 (475)			
	49	Floor height	Lowest point		in (mm)	30.4 (772)			
	50	Attachment relief pressure			psi (bar)	2250 (155)			
	51	Auxiliary oil flow	3rd and 4th function		gal/min (l/min)	11 (40)			
	52	Sound level	Measured per ANSI B56.11.5		dB (A)	60	60	65	65

* Optional with Hyster Power Cellect™

Above specifications, unless otherwise listed, are for a standard truck without optional equipment.
Right angle stack and equal intersecting aisle dimensions provided with a 48'' long and 40'' wide pallet load, allowing zero clearance.

E50XN SPECIFICATIONS

GENERAL	1	Manufacturer				Hyster		
	2	Model designation				E50XN		
	3	Power				Electric		
	4	Operation				Sit		
	5	Rated capacity			lb (kg)	5000 (2268)		
	6	Load center			in (mm)	24 (610)		
TIRES	7	Tire type - cushion, solid, pneumatic, etc.		Drive/steer		Cushion/cushion		
	8	Tire size		Drive/steer	in	21 x 7 x 15 / 16 x 5 x 10.5		
	9	Wheels - number	X=driven	Drive/steer		2x/2		
	10	Tread	Tires	Std dr/wide dr/steer	in (mm)	35.1/41.9/37 (892/1064/940)		
DIMENSIONS	11	Mast tilt		Std opt opt	degrees	5F/5B 10F/5B (5F/4B)		
	12	Mast - lowered height		Std mast	in (mm)	83 (2085)		
	13	Free lift - top of fork	Std 2-stg limited free lift mast		in (mm)	5 (140)		
		Opt 2-stg full free lift mast with/without LBR			in (mm)	33/60 (860/1525)		
	14	Lift height - top of fork	Std 2-stg limited free lift mast		in (mm)	125 (3192)		
	15	Mast - extended height	Std mast with/without LBR		in (mm)	174/148 (4415/3740)		
	16	Overhead guard height	Std/drive in rack/opt/opt flat plate		in (mm)	88.5/88.5/86.5/84.1 (2248/2248/2197/2137)		
	17	Sip to bottom std OHG	Susp at mid-point	Std/susp/swivel	in (mm)	38.3/37.4/37.3 (975/950/948)		
	18	Tow pin height	Vertical center of pin		in (mm)	11 (280)		
	19	Overall width	Standard tread/wide tread		in (mm)	42.1/48.9 (1070/1242)		
	20	Forks	Thickness x width x length		in (mm)	1.6 x 3.9 x 42 (40 x 100 x 1067)		
	21	Standard carriage width		Class II	in (mm)	38.5 (977)		
	22	Floor to top of battery rollers			in (mm)	17.2 (436)		
	23	Ground clearance	Lowest point	NL/RL	in (mm)	3.6/3.3 (91/85)		
	24	Ground clearance	Center of truck	NL/RL	in (mm)	3.9/3.6 (98/92)		
	25	Load distance	Center of wheel to face of forks		in (mm)	15.4 (390)		
	26	Battery compartment	Height	Without/with battery rollers	in (mm)	23.9/23.3 (607/593)		
			Width		in (mm)	39.1 (992)		
				Nominal	SIZE	27"	30"	33"
			Length	Actual	in (mm)	27.6 (700)	30.9 (786)	33.3 (847)
	27	Length to face of forks	Chassis length		in (mm)	80.3 (2040)	82.8 (2102)	84.3 (2143)
	28	Wheelbase			in (mm)	48.4 (1230)	51.8 (1316)	54.2 (1377)
	29	Right angle stack			in (mm)	132.5 (3366)	135.2 (3434)	137.5 (3493)
	30	Equal aisle	90˚ Intersecting aisle		in (mm)	71.8 (1823)	72.5 (1842)	73.1 (1858)
	31	Outside turning radius			in (mm)	69.2 (1757)	71.9 (1825)	74.2 (1884)
WT.	32	Truck weight	Without battery	NI	lb (kg)	7030 (3189)	6670 (3025)	6280 (2849)
	33	Axle loading - drive	Static w/ max. wt. battery	NL/RL	lb (kg)	3844/12907 (1744/5855)	4114/12911 (1866/5856)	4386/13015 (1989/5904)
	34	Axle loading - steer	Static w/ max. wt. battery	NL/RL	lb (kg)	6477/2414 (2938/1095)	6053/2255 (2746/1023)	5796/2166 (2629/982)

PERFORMANCE						STANDARD PERFORMANCE		POWERPLUS PERFORMANCE	
					VOLTS	36	48	48	80
	36	Travel speed	Extended shift off	NL/RL	mph (km/h)	10.7/9.6 (17.3/15.4)	11.3/11.3 (18.2/18.2)	12.3/12.8 (19.8/20.6)	12.3/12.5 (19.8/20.1)
			Extended shift on	NL/RL	mph (km/h)	9.7/8.7 (15.6/14)	10.6/9.8 (17.1/15.8)	12.2/12.4 (19.7/19.9)	12.2/12.2 (19.7/19.7)
	37	Lift speed	Std 2-stg LFL mast	NL/RL	ft/min (m/sec)	100/55 (0.51/0.28)	124/75 (0.63/0.38)	142/96 (0.72/0.49)	142/96 (0.72/0.49)
			Opt 2-stg FFL mast	NL/RL	ft/min (m/sec)	93/57 (0.47/0.29)	124/77 (0.63/0.39)	130/93 (0.66/0.47)	130/93 (0.66/0.47)
			Opt 3-stg FFL mast	NL/RL	ft/min (m/sec)	94/57 (0.48/0.29)	124/77 (0.63/0.39)	134/94 (0.68/0.48)	134/94 (0.68/0.48)
			Opt 4-stg FFL mast	NL/RL	ft/min (m/sec)	96/57 (0.49/0.29)	124/75 (0.63/0.38)	136/94 (0.69/0.48)	136/94 (0.69/0.48)
	38	Lower speed	Std 2-stg LFL mast	NL/RL	ft/min (m/sec)	100/112 (0.51/0.57)			
			Opt 2-stg FFL mast	NL/RL	ft/min (m/sec)	91/106 (0.46/0.54)			
			Opt 3-stg FFL mast	NL/RL	ft/min (m/sec)	93/108 (0.47/0.55)			
			Opt 4-stg FFL mast	NL/RL	ft/min (m/sec)	77/91 (0.39/0.46)			
	39	Gradeability	5 minute rating	NL/RL	%	35/20	36/21	39/25	39/33
			60 minute rating	NL/RL	%	13/7	14/8	25/15	32/19
	40	Drawbar pull	5 minute rating	NL/RL	LBF	3358/3152	3464/3257	3773/3909	3773/4926
			60 minute rating	NL/RL	LBF	1295/1129	1380/1212	2545/2345	3208/2993
	41	Brake	Method of control	Service/parking		Hydraulic/mechanical			
			Method of operation	Service/parking		Foot/foot			
ELECTRIC	42	Battery	Type			Lead acid | Thin Plate Pure Lead* | Lithium-ion*			
						STANDARD PERFORMANCE		POWERPLUS PERFORMANCE	
					VOLTS	36	48	48	80
	43	Traction motor	60 minute rating		hp (kW)	24.7 (18.4)	24.7 (18.4)	31.6 (23.6)	31.6 (23.6)
	44	Pump motor	15% rating		hp (kW)	16.6 (12.4)	22.4 (16.7)	31.8 (23.7)	32.2 (24)
	45	Traction motor	Type/control method			AC/transistor			
	46	Pump motor	Type/control method			AC/transistor			
	47	Number of speeds	Traction/pump			Infinitely variable/infinitely variable			
OTHER	48	Step height			in (mm)	18.7 (475)			
	49	Floor height	Lowest point		in (mm)	30.4 (772)			
	50	Attachment relief pressure			psi (bar)	2250 (155)			
	51	Auxiliary oil flow	3rd and 4th function		gal/min (l/min)	11 (40)			
	52	Sound level	Measured per ANSI B56.11.5		dB (A)	60	60	65	65

* Optional with Hyster Power Cellect™

Above specifications, unless otherwise listed, are for a standard truck without optional equipment.
Right angle stack and equal intersecting aisle dimensions provided with a 48" long and 40" wide pallet load, allowing zero clearance.

E55XN SPECIFICATIONS

GENERAL	1	Manufacturer				Hyster			
	2	Model designation				E55XN			
	3	Power				Electric			
	4	Operation				Sit			
	5	Rated capacity			lb (kg)	5500 (2495)			
	6	Load center			in (mm)	24 (610)			
TIRES	7	Tire type - cushion, solid, pneumatic, etc.		Drive/steer		Cushion/cushion			
	8	Tire size		Drive/steer	in	21 x 7 x 15 / 16 x 5 x 10.5			
	9	Wheels - number	X=driven	Drive/steer		2x/2			
	10	Tread	Tires	Std dr/wide dr/steer	in (mm)	35.1/41.9/37 (892/1064/940)			
DIMENSIONS	11	Mast tilt		Std opt opt	degrees	5F/5B 10F/5B (5F/4B)			
	12	Mast - lowered height		Std mast	in (mm)	83 (2085)			
	13	Free lift - top of fork	Std 2-stg limited free lift mast		in (mm)	5 (140)			
		Opt 2-stg full free lift mast with/without LBR			in (mm)	33/60 (860/1525)			
	14	Lift height - top of fork	Std 2-stg limited free lift mast		in (mm)	125 (3192)			
	15	Mast - extended height	Std mast with/without LBR		in (mm)	174/148 (4415/3740)			
	16	Overhead guard height	Std/drive in rack/opt/opt flat plate		in (mm)	88.5/88.5/86.5/84.1 (2248/2248/2197/2137)			
	17	Sip to bottom std OHG	Susp at mid-point	Std/susp/swivel	in (mm)	38.3/37.4/37.3 (975/950/948)			
	18	Tow pin height	Vertical center of pin		in (mm)	11 (280)			
	19	Overall width	Standard tread/wide tread		in (mm)	42.1/48.9 (1070/1242)			
	20	Forks	Thickness x width x length		in (mm)	1.6 x 3.9 x 42 (40 x 100 x 1067)			
	21	Standard carriage width		Class II	in (mm)	38.5 (977)			
	22	Floor to top of battery rollers			in (mm)	17.2 (436)			
	23	Ground clearance	Lowest point	NL/RL	in (mm)	3.6/3.3 (91/85)			
	24	Ground clearance	Center of truck	NL/RL	in (mm)	3.9/3.6 (98/92)			
	25	Load distance	Center of wheel to face of forks		in (mm)	15.4 (390)			
	26	Battery compartment	Height	Without/with battery rollers	in (mm)	23.9/23.3 (607/593)			
			Width		in (mm)	39.1 (992)			
				Nominal	SIZE	33"			
			Length	Actual	in (mm)	33.3 (847)			
	27	Length to face of forks	Chassis length		in (mm)	85.1 (2163)			
	28	Wheelbase			in (mm)	54.2 (1377)			
	29	Right angle stack			in (mm)	137.9 (3502)			
	30	Equal aisle	90˚ Intersecting aisle		in (mm)	73.8 (1874)			
	31	Outside turning radius			in (mm)	74.5 (1893)			
WT.	32	Truck weight	Without battery	NL	lb (kg)	6710 (3044)			
	33	Axle loading - drive	Static w/ max. wt. battery	NL/RL	lb (kg)	4313/13806 (1956/6262)			
	34	Axle loading - steer	Static w/ max. wt. battery	NL/RL	lb (kg)	6289/2297 (2853/1042)			
PERFORMANCE						STANDARD PERFORMANCE		POWERPLUS PERFORMANCE	
					VOLTS	36	48	48	80
	36	Travel speed	Extended shift off	NL/RL	mph (km/h)	10.7/9.4 (17.3/15.1)	11.3/11.3 (18.2/18.2)	12.3/12.8 (19.8/20.6)	12.3/12.5 (19.8/20.1)
			Extended shift on	NL/RL	mph (km/h)	9.6/8.5 (15.5/13.7)	10.5/9.6 (16.9/15.5)	12.2/12.4 (19.7/19.9)	12.2/12.2 (19.7/19.7)
	37	Lift speed	Std 2-stg LFL mast	NL/RL	ft/min (m/sec)	100/53 (0.51/0.27)	124/71 (0.63/0.36)	142/93 (0.72/0.47)	142/93 (0.72/0.47)
			Opt 2-stg FFL mast	NL/RL	ft/min (m/sec)	93/57 (0.47/0.29)	124/75 (0.63/0.38)	130/89 (0.66/0.45)	130/89 (0.66/0.45)
			Opt 3-stg FFL mast	NL/RL	ft/min (m/sec)	94/55 (0.48/0.28)	124/73 (0.63/0.37)	134/91 (0.68/0.46)	134/91 (0.68/0.46)
			Opt 4-stg FFL mast	NL/RL	ft/min (m/sec)	96/57 (0.49/0.29)	124/75 (0.63/0.38)	136/94 (0.69/0.48)	136/94 (0.69/0.48)
	38	Lower speed	Std 2-stg LFL mast	NL/RL	ft/min (m/sec)	100/114 (0.51/0.58)			
			Opt 2-stg FFL mast	NL/RL	ft/min (m/sec)	91/108 (0.46/0.55)			
			Opt 3-stg FFL mast	NL/RL	ft/min (m/sec)	93/110 (0.47/0.56)			
			Opt 4-stg FFL mast	NL/RL	ft/min (m/sec)	77/91 (0.39/0.46)			
	39	Gradeability	5 minute rating	NL/RL	%	34/19	34/20	36/24	36/30
			60 minute rating	NL/RL	%	12/7	13/8	24/14	31/18
	40	Drawbar pull	5 minute rating	NL/RL	LBF	3350/3139	3456/3243	3715/3868	3715/4881
			60 minute rating	NL/RL	LBF	1287/1111	1373/1198	2535/2310	3198/2956
	41	Brake	Method of control	Service/parking		Hydraulic/mechanical			
			Method of operation	Service/parking		Foot/foot			
ELECTRIC	42	Battery	Type			Lead acid | Thin Plate Pure Lead* | Lithium-ion*			
						STANDARD PERFORMANCE		POWERPLUS PERFORMANCE	
					VOLTS	36	48	48	80
	43	Traction motor	60 minute rating		hp (kW)	24.7 (18.4)	24.7 (18.4)	31.6 (23.6)	31.6 (23.6)
	44	Pump motor	15% rating		hp (kW)	16.6 (12.4)	22.4 (16.7)	31.8 (23.7)	32.2 (24)
	45	Traction motor	Type/control method			AC/transistor			
	46	Pump motor	Type/control method			AC/transistor			
	47	Number of speeds	Traction/pump			Infinitely variable/infinitely variable			
OTHER	48	Step height			in (mm)	18.7 (475)			
	49	Floor height	Lowest point		in (mm)	30.4 (772)			
	50	Attachment relief pressure			psi (bar)	2250 (155)			
	51	Auxiliary oil flow	3rd and 4th function		gal/min (l/min)	11 (40)			
	52	Sound level	Measured per ANSI B56.11.5		dB (A)	60	60	65	65

* Optional with Hyster Power Cellect™

Above specifications, unless otherwise listed, are for a standard truck without optional equipment.
Right angle stack and equal intersecting aisle dimensions provided with a 48" long and 40" wide pallet load, allowing zero clearance.

E60XN SPECIFICATIONS

GENERAL	1	Manufacturer				Hyster		
	2	Model designation				E60XN		
	3	Power				Electric		
	4	Operation				Sit		
	5	Rated capacity			lb (kg)	6000 (2722)		
	6	Load center			in (mm)	24 (610)		
TIRES	7	Tire type - cushion, solid, pneumatic, etc.		Drive/steer		Cushion/cushion		
	8	Tire size		Drive/steer	in	21 x 8 x 15 / 16 x 6 x 10.5		
	9	Wheels - number	X=driven	Drive/steer		2x/2		
	10	Tread	Tires	Std dr/wide dr/steer	in (mm)	35.6/40.9/36 (905/1039/915)		
DIMENSIONS	11	Mast tilt		Std opt opt	degrees	5F/5B 10F/5B (5F/4B)		
	12	Mast - lowered height		Std mast	in (mm)	83 (2085)		
	13	Free lift - top of fork	Std 2-stg limited free lift mast		in (mm)	5 (140)		
		Opt 2-stg full free lift mast with/without LBR			in (mm)	33/56 (855/1440)		
	14	Lift height - top of fork	Std 2-stg limited free lift mast		in (mm)	118 (3009)		
	15	Mast - extended height	Std mast with/without LBR		in (mm)	167/144 (4235/3655)		
	16	Overhead guard height	Std/drive in rack/opt/opt flat plate		in (mm)	88.5/88.5/86.5/84.1 (2248/2248/2197/2137)		
	17	Sip to bottom std OHG	Susp at mid-point	Std/susp/swivel	in (mm)	38.3/37.4/37.3 (975/950/948)		
	18	Tow pin height	Vertical center of pin		in (mm)	11 (280)		
	19	Overall width	Standard tread/wide tread		in (mm)	43.6/48.9 (1108/1242)		
	20	Forks	Thickness x width x length		in (mm)	2 x 4.9 x 42 (50 x 125 x 1067)		
	21	Standard carriage width		Class III	in (mm)	38.5 (977)		
	22	Floor to top of battery rollers			in (mm)	17.2 (436)		
	23	Ground clearance	Lowest point	NL/RL	in (mm)	3.6/3.3 (91/85)		
	24	Ground clearance	Center of truck	NL/RL	in (mm)	3.7/3.6 (94/92)		
	25	Load distance	Center of wheel to face of forks		in (mm)	15.8 (402)		
	26	Battery compartment	Height	Without/with battery rollers	in (mm)	23.9/23.3 (607/593)		
			Width		in (mm)	39.1 (992)		
				Nominal	SIZE	33"		
			Length	Actual	in (mm)	33.3 (847)		
	27	Length to face of forks	Chassis length		in (mm)	86.5 (2199)		
	28	Wheelbase			in (mm)	54.2 (1377)		
	29	Right angle stack			in (mm)	139.2 (3536)		
	30	Equal aisle	90˚ Intersecting aisle		in (mm)	74.2 (1885)		
	31	Outside turning radius			in (mm)	75.4 (1915)		
WT.	32	Truck weight	Without battery	NL	lb (kg)	7350 (3334)		
	33	Axle loading - drive	Static w/ max. wt. battery	NL/RL	lb (kg)	4474/14882 (2029/6750)		
	34	Axle loading - steer	Static w/ max. wt. battery	NL/RL	lb (kg)	6769/2361 (3070/1071)		
PERFORMANCE						STANDARD PERFORMANCE		POWERPLUS PERFORMANCE	
					VOLTS	36	48	48	80
	36	Travel speed	Extended shift off	NL/RL	mph (km/h)	10.6/9.1 (17/14.6)	11.3/11.3 (18.2/18.2)	12.3/12.8 (19.8/20.6)	12.3/12.5 (19.8/20.1)
			Extended shift on	NL/RL	mph (km/h)	9.5/8.3 (15.3/13.3)	10.4/9.4 (16.7/15.1)	12.2/12.2 (19.7/19.7)	12.2/12.1 (19.7/19.4)
	37	Lift speed	Std 2-stg LFL mast	NL/RL	ft/min (m/sec)	93/49 (0.47/0.25)	116/65 (0.59/0.33)	124/83 (0.63/0.42)	124/83 (0.63/0.42)
			Opt 2-stg FFL mast	NL/RL	ft/min (m/sec)	83/49 (0.42/0.25)	108/65 (0.55/0.33)	116/81 (0.59/0.41)	116/81 (0.59/0.41)
			Opt 3-stg FFL mast	NL/RL	ft/min (m/sec)	85/49 (0.43/0.25)	112/65 (0.57/0.33)	118/81 (0.6/0.41)	118/81 (0.6/0.41)
			Opt 4-stg FFL mast	NL/RL	ft/min (m/sec)	96/57 (0.49/0.29)	124/75 (0.63/0.38)	136/94 (0.69/0.48)	136/94 (0.69/0.48)
	38	Lower speed	Std 2-stg LFL mast	NL/RL	ft/min (m/sec)	91/110 (0.46/0.56)			
			Opt 2-stg FFL mast	NL/RL	ft/min (m/sec)	73/102 (0.37/0.52)			
			Opt 3-stg FFL mast	NL/RL	ft/min (m/sec)	79/104 (0.4/0.53)			
			Opt 4-stg FFL mast	NL/RL	ft/min (m/sec)	77/91 (0.39/0.46)			
	39	Gradeability	5 minute rating	NL/RL	%	32/19	33/19	36/22	36/28
			60 minute rating	NL/RL	%	12/7	13/7	22/13	29/16
	40	Drawbar pull	5 minute rating	NL/RL	LBF	3342/3124	3448/3229	3883/3820	3883/4830
			60 minute rating	NL/RL	LBF	1280/1094	1365/1184	2518/2269	3181/2912
	41	Brake	Method of control	Service/parking		Hydraulic/mechanical			
			Method of operation	Service/parking		Foot/foot			
ELECTRIC	42	Battery	Type			Lead acid | Thin Plate Pure Lead* | Lithium-ion*			
						STANDARD PERFORMANCE		POWERPLUS PERFORMANCE	
					VOLTS	36	48	48	80
	43	Traction motor	60 minute rating		hp (kW)	24.7 (18.4)	24.7 (18.4)	31.6 (23.6)	31.6 (23.6)
	44	Pump motor	15% rating		hp (kW)	16.6 (12.4)	22.4 (16.7)	31.8 (23.7)	32.2 (24)
	45	Traction motor	Type/control method			AC/transistor			
	46	Pump motor	Type/control method			AC/transistor			
	47	Number of speeds	Traction/pump			Infinitely variable/infinitely variable			
OTHER	48	Step height			in (mm)	18.7 (475)			
	49	Floor height	Lowest point		in (mm)	30.4 (772)			
	50	Attachment relief pressure			psi (bar)	2250 (155)			
	51	Auxiliary oil flow	3rd and 4th function		gal/min (l/min)	11 (40)			
	52	Sound level	Measured per ANSI B56.11.5		dB (A)	60	60	65	65

* Optional with Hyster Power Cellect™

Above specifications, unless otherwise listed, are for a standard truck without optional equipment.
Right angle stack and equal intersecting aisle dimensions provided with a 48" long and 40" wide pallet load, allowing zero clearance.

E65XN SPECIFICATIONS

GENERAL	1	Manufacturer				Hyster			
	2	Model designation				E65XN			
	3	Power				Electric			
	4	Operation				Sit			
	5	Rated capacity			lb (kg)	6500 (2948)			
	6	Load center			in (mm)	24 (610)			
TIRES	7	Tire type - cushion, solid, pneumatic, etc.		Drive/steer		Cushion/cushion			
	8	Tire size		Drive/steer	in	21 x 8 x 15 / 16 x 6 x 10.5			
	9	Wheels - number	X=driven	Drive/steer		2x/2			
	10	Tread	Tires Std dr/wide dr/steer		in (mm)	35.6/40.9/36 (905/1039/915)			
DIMENSIONS	11	Mast tilt		Std opt opt	degrees	5F/5B 10F/5B (5F/4B)			
	12	Mast - lowered height		Std mast	in (mm)	83 (2085)			
	13	Free lift - top of fork	Std 2-stg limited free lift mast		in (mm)	5 (140)			
		Opt 2-stg full free lift mast with/without LBR			in (mm)	33/56 (855/1440)			
	14	Lift height - top of fork	Std 2-stg limited free lift mast		in (mm)	118 (3009)			
	15	Mast - extended height	Std mast with/without LBR		in (mm)	167/144 (4235/3655)			
	16	Overhead guard height	Std/drive in rack/opt/opt flat plate		in (mm)	88.5/88.5/86.5/84.1 (2248/2248/2197/2137)			
	17	Sip to bottom std OHG	Susp at mid-point	Std/susp/swivel	in (mm)	38.3/37.4/37.3 (975/950/948)			
	18	Tow pin height	Vertical center of pin		in (mm)	11 (280)			
	19	Overall width	Standard tread/wide tread		in (mm)	43.6/48.9 (1108/1242)			
	20	Forks	Thickness x width x length		in (mm)	2 x 4.9 x 42 (50 x 125 x 1067)			
	21	Standard carriage width		Class III	in (mm)	38.5 (977)			
	22	Floor to top of battery rollers			in (mm)	17.2 (436)			
	23	Ground clearance	Lowest point	NL/RL	in (mm)	3.6/3.3 (91/85)			
	24	Ground clearance	Center of truck	NL/RL	in (mm)	3.7/3.6 (94/92)			
	25	Load distance	Center of wheel to face of forks		in (mm)	15.8 (402)			
	26	Battery compartment	Height Without/with battery rollers		in (mm)	23.9/23.3 (607/593)			
			Width		in (mm)	39.1 (992)			
				Nominal	SIZE	36"		40"	
			Length	Actual	in (mm)	36.7 (933)		40 (1015)	
	27	Length to face of forks	Chassis length		in (mm)	90 (2285)		92.2 (2343)	
	28	Wheelbase			in (mm)	57.6 (1463)		60.8 (1545)	
	29	Right angle stack			in (mm)	142.9 (3629)		145.5 (3695)	
	30	Equal aisle	90˚ Intersecting aisle		in (mm)	76.1 (1933)		77 (1956)	
	31	Outside turning radius			in (mm)	79.1 (2008)		81.7 (2074)	
WT.	32	Truck weight	Without battery	NL	lb (kg)	7400 (3357)		7040 (3193)	
	33	Axle loading - drive	Static w/ max. wt. battery	NL/RL	lb (kg)	4640/15635 (2105/7092)		4914/15670 (2229/7108)	
	34	Axle loading - steer	Static w/ max. wt. battery	NL/RL	lb (kg)	6853/2359 (3108/1070)		6514/2258 (2955/1024)	
PERFORMANCE						STANDARD PERFORMANCE		POWERPLUS PERFORMANCE	
					VOLTS	36	48	48	80
	36	Travel speed	Extended shift off	NL/RL	mph (km/h)	10.6/9.1 (17/14.6)	11.3/11.3 (18.2/18.2)	12.3/12.7 (19.8/20.4)	12.3/12.4 (19.8/20)
			Extended shift on	NL/RL	mph (km/h)	9.5/8.2 (15.3/13.2)	10.4/9.3 (16.7/15)	12.2/12.1 (19.7/19.5)	12.2/11.8 (19.7/19)
	37	Lift speed	Std 2-stg LFL mast	NL/RL	ft/min (m/sec)	93/47 (0.47/0.24)	116/63 (0.59/0.32)	124/79 (0.63/0.4)	124/79 (0.63/0.4)
			Opt 2-stg FFL mast	NL/RL	ft/min (m/sec)	83/47 (0.42/0.24)	108/63 (0.55/0.32)	116/77 (0.59/0.39)	116/77 (0.59/0.39)
			Opt 3-stg FFL mast	NL/RL	ft/min (m/sec)	85/47 (0.43/0.24)	112/63 (0.57/0.32)	118/77 (0.6/0.39)	118/77 (0.6/0.39)
			Opt 4-stg FFL mast	NL/RL	ft/min (m/sec)	96/57 (0.49/0.29)	124/75 (0.63/0.38)	136/94 (0.69/0.48)	136/94 (0.69/0.48)
	38	Lower speed	Std 2-stg LFL mast	NL/RL	ft/min (m/sec)	91/112 (0.46/0.57)			
			Opt 2-stg FFL mast	NL/RL	ft/min (m/sec)	73/104 (0.37/0.53)			
			Opt 3-stg FFL mast	NL/RL	ft/min (m/sec)	79/106 (0.4/0.54)			
			Opt 4-stg FFL mast	NL/RL	ft/min (m/sec)	77/91 (0.39/0.46)			
	39	Gradeability	5 minute rating	NL/RL	%	31/18	31/19	37/21	37/26
			60 minute rating	NL/RL	%	12/6	12/7	22/12	28/16
	40	Drawbar pull	5 minute rating	NL/RL	LBF	3335/3107	3440/3211	4084/3791	4084/4798
			60 minute rating	NL/RL	LBF	1274/1083	1360/1167	2513/2245	3176/2886
	41	Brake	Method of control	Service/parking		Hydraulic/mechanical			
			Method of operation	Service/parking		Foot/foot			
ELECTRIC	42	Battery	Type			Lead acid | Thin Plate Pure Lead* | Lithium-ion*			
						STANDARD PERFORMANCE		POWERPLUS PERFORMANCE	
					VOLTS	36	48	48	80
	43	Traction motor	60 minute rating		hp (kW)	24.7 (18.4)	24.7 (18.4)	31.6 (23.6)	31.6 (23.6)
	44	Pump motor	15% rating		hp (kW)	16.6 (12.4)	22.4 (16.7)	31.8 (23.7)	32.2 (24)
	45	Traction motor	Type/control method			AC/transistor			
	46	Pump motor	Type/control method			AC/transistor			
	47	Number of speeds	Traction/pump			Infinitely variable/infinitely variable			
OTHER	48	Step height			in (mm)	18.7 (475)			
	49	Floor height	Lowest point		in (mm)	30.4 (772)			
	50	Attachment relief pressure			psi (bar)	2250 (155)			
	51	Auxiliary oil flow	3rd and 4th function		gal/min (l/min)	11 (40)			
	52	Sound level	Measured per ANSI B56.11.5		dB (A)	60	60	65	65

* Optional with Hyster Power Cellect™

Above specifications, unless otherwise listed, are for a standard truck without optional equipment.
Right angle stack and equal intersecting aisle dimensions provided with a 48" long and 40" wide pallet load, allowing zero clearance.

E70XN SPECIFICATIONS

GENERAL	1	Manufacturer				Hyster		
	2	Model designation				E70XN		
	3	Power				Electric		
	4	Operation				Sit		
	5	Rated capacity			lb (kg)	7000 (3175)		
	6	Load center			in (mm)	24 (610)		
TIRES	7	Tire type - cushion, solid, pneumatic, etc.		Drive/steer		Cushion/cushion		
	8	Tire size		Drive/steer	in	21 x 9 x 15 / 16 x 7 x 10.5		
	9	Wheels - number	X=driven	Drive/steer		2x/2		
	10	Tread	Tires	Std dr/wide dr/steer	in (mm)	36.6/39.9/37 (929/1013/940)		
DIMENSIONS	11	Mast tilt		Std opt opt	degrees	5F/5B 10F/5B (5F/4B)		
	12	Mast - lowered height		Std mast	in (mm)	83 (2085)		
	13	Free lift - top of fork	Std 2-stg limited free lift mast		in (mm)	5 (140)		
		Opt 2 stg full free lift mast with/without LBR			in (mm)	33/56 (855/1440)		
	14	Lift height - top of fork	Std 2-stg limited free lift mast		in (mm)	118 (3009)		
	15	Mast - extended height	Std mast with/without LBR		in (mm)	167/144 (4235/3655)		
	16	Overhead guard height	Std/drive in rack/opt/opt flat plate		in (mm)	88.5/88.5/86.5/84.1 (2248/2248/2197/2137)		
	17	Sip to bottom std OHG	Susp at mid-point	Std/susp/swivel	in (mm)	38.3/37.4/37.3 (975/950/948)		
	18	Tow pin height	Vertical center of pin		in (mm)	11 (280)		
	19	Overall width	Standard tread/wide tread		in (mm)	45.6/48.9 (1158/1242)		
	20	Forks	Thickness x width x length		in (mm)	2 x 4.9 x 42 (50 x 125 x 1067)		
	21	Standard carriage width		Class III	in (mm)	38.5 (977)		
	22	Floor to top of battery rollers			in (mm)	17.2 (436)		
	23	Ground clearance	Lowest point	NL/RL	in (mm)	3.6/3.3 (91/85)		
	24	Ground clearance	Center of truck	NL/RL	in (mm)	3.7/3.6 (94/92)		
	25	Load distance	Center of wheel to face of forks		in (mm)	15.8 (402)		
	26	Battery compartment	Height	Without/with battery rollers	in (mm)	23.9/23.3 (607/593)		
			Width		in (mm)	39.1 (992)		
				Nominal	SIZE	40"		
			Length	Actual	in (mm)	40 (1015)		
	27	Length to face of forks	Chassis length		in (mm)	93.1 (2367)		
	28	Wheelbase			in (mm)	60.8 (1545)		
	29	Right angle stack			in (mm)	146.3 (3715)		
	30	Equal aisle	90˚ Intersecting aisle		in (mm)	77.4 (1965)		
	31	Outside turning radius			in (mm)	82.4 (2094)		
WT.	32	Truck weight	Without battery	NL	lb (kg)	7500 (3402)		
	33	Axle loading - drive	Static w/ max. wt. battery	NL/RL	lb (kg)	4868/16451 (2208/7462)		
	34	Axle loading - steer	Static w/ max. wt. battery	NL/RL	lb (kg)	7022/2439 (3185/1106)		
PERFORMANCE						STANDARD PERFORMANCE		POWERPLUS PERFORMANCE
					VOLTS	36	48	48	80
	36	Travel speed	Extended shift off	NL/RL	mph (km/h)	10.6/9 (17/14.5)	11.3/11.3 (18.2/18.2)	12.3/12.6 (19.8/20.3)	12.3/12.3 (19.8/19.8)
			Extended shift on	NL/RL	mph (km/h)	9.4/8.1 (15.2/13.1)	10.3/9.3 (16.6/14.9)	12.2/12.1 (19.7/19.4)	12.2/11.9 (19.7/19.1)
	37	Lift speed	Std 2-stg LFL mast	NL/RL	ft/min (m/sec)	93/45 (0.47/0.23)	116/61 (0.59/0.31)	124/73 (0.63/0.37)	124/73 (0.63/0.37)
			Opt 2-stg FFL mast	NL/RL	ft/min (m/sec)	83/45 (0.42/0.23)	108/61 (0.55/0.31)	116/73 (0.59/0.37)	116/73 (0.59/0.37)
			Opt 3-stg FFL mast	NL/RL	ft/min (m/sec)	85/45 (0.43/0.23)	112/61 (0.57/0.31)	118/73 (0.6/0.37)	118/73 (0.6/0.37)
			Opt 4-stg FFL mast	NL/RL	ft/min (m/sec)	96/57 (0.49/0.29)	124/75 (0.63/0.38)	136/94 (0.69/0.48)	136/94 (0.69/0.48)
	38	Lower speed	Std 2-stg LFL mast	NL/RL	ft/min (m/sec)	91/114 (0.46/0.58)			
			Opt 2-stg FFL mast	NL/RL	ft/min (m/sec)	73/106 (0.37/0.54)			
			Opt 3-stg FFL mast	NL/RL	ft/min (m/sec)	79/0.5 (0.4/0.56)			
			Opt 4-stg FFL mast	NL/RL	ft/min (m/sec)	77/91 (0.39/0.46)			
	39	Gradeability	5 minute rating	NL/RL	%	29/17	29/18	36/19	37/25
			60 minute rating	NL/RL	%	10/6	11/6	21/11	27/14
	40	Drawbar pull	5 minute rating	NL/RL	LBF	3329/3089	3428/3201	4101/3744	4193/4745
			60 minute rating	NL/RL	LBF	1269/1072	1355/1149	2502/2204	3165/2842
	41	Brake	Method of control	Service/parking		Hydraulic/mechanical			
			Method of operation	Service/parking		Foot/foot			
ELECTRIC	42	Battery	Type			Lead acid | Thin Plate Pure Lead* | Lithium-ion*			
						STANDARD PERFORMANCE		POWERPLUS PERFORMANCE	
					VOLTS	36	48	48	80
	43	Traction motor	60 minute rating		hp (kW)	24.7 (18.4)	24.7 (18.4)	31.6 (23.6)	31.6 (23.6)
	44	Pump motor	15% rating		hp (kW)	16.6 (12.4)	22.4 (16.7)	31.8 (23.7)	32.2 (24)
	45	Traction motor	Type/control method			AC/transistor			
	46	Pump motor	Type/control method			AC/transistor			
	47	Number of speeds	Traction/pump			Infinitely variable/infinitely variable			
OTHER	48	Step height			in (mm)	18.7 (475)			
	49	Floor height	Lowest point		in (mm)	30.4 (772)			
	50	Attachment relief pressure			psi (bar)	2250 (155)			
	51	Auxiliary oil flow	3rd and 4th function		gal/min (l/min)	11 (40)			
	52	Sound level	Measured per ANSI B56.11.5		dB (A)	60	60	65	65

* Optional with Hyster Power Cellect™

Above specifications, unless otherwise listed, are for a standard truck without optional equipment.
Right angle stack and equal intersecting aisle dimensions provided with a 48" long and 40" wide pallet load, allowing zero clearance.

E45-55XN MAST DIMENSIONS

Maximum fork height (TOF)	Overall lowered height	Overall extended height		Free lift (TOF)		Approx. total wt. of standard equipped truck w/o battery		
		w/ load backrest	w/o load backrest	w/ load backrest	w/o load backrest	E45XN	E50XN	E55XN
in (mm)	in (mm)	in (mm)	in (mm)	in (mm)	in (mm)	lb (kg)	lb (kg)	lb (kg)
2-STAGE LIMITED FREE LIFT (LFL) VISTA®PLUS MAST								
125 (3192)	83 (2085)	174 (4415)	147 (3749)	5 (140)	5 (140)	6860 (3112)	7270 (3298)	6950 (3152)
133 (3392)	86 (2185)	182 (4615)	155 (3949)	5 (140)	5 (140)	7060 (3202)	7470 (3388)	7150 (3243)
137 (3492)	88 (2235)	186 (4715)	159 (4049)	5 (140)	5 (140)	7160 (3248)	7570 (3434)	7250 (3289)
2-STAGE FULL FREE LIFT (FFL) VISTA® MAST								
126 (3202)	83 (2085)	175 (4425)	148 (3759)	33 (862)	60 (1528)	6960 (3157)	7370 (3343)	7050 (3198)
133 (3402)	86 (2185)	183 (4625)	155 (3959)	37 (964)	64 (1628)	7160 (3248)	7570 (3434)	7250 (3289)
137 (3502)	88 (2235)	186 (4725)	159 (4059)	39 (1012)	66 (1678)	7260 (3293)	7670 (3479)	7350 (3334)
3-STAGE FULL FREE LIFT (FFL) VISTA®PLUS MAST								
189 (4800)	83 (2085)	238 (6023)	210 (5399)	33 (862)	60 (1546)	7460 (3384)	7870 (3570)	7550 (3425)
194 (4950)	85 (2135)	243 (6173)	216 (5489)	36 (917)	62 (1596)	7480 (3393)	7890 (3579)	7570 (3434)
200 (5100)	88 (2235)	249 (6323)	222 (5639)	39 (1012)	66 (1696)	7530 (3416)	7940 (3602)	7620 (3456)
218 (5550)	94 (2385)	267 (6773)	239 (6089)	45 (1162)	72 (1846)	7610 (3452)	8020 (3638)	7700 (3493)
236 (6000)	102 (2585)	285 (7223)	257 (6539)	53 (1362)	80 (2046)	7690 (3488)	8100 (3674)	7780 (3529)
4-STAGE FULL FREE LIFT (FFL) VISTA® MAST								
240 (6098)	84 (2133)	289 (7321)	263 (6678)	35 (910)	61 (1553)	8000 (3629)	8410 (3815)	8090 (3670)
252 (6404)	88 (2235)	301 (7627)	275 (6984)	39 (1012)	65 (1655)	8070 (3660)	8480 (3846)	8160 (3701)
264 (6710)	92 (2336)	313 (7933)	287 (7290)	43 (1113)	69 (1756)	8140 (3692)	8550 (3878)	8230 (3733)

E60-70XN MAST DIMENSIONS

Maximum fork height (TOF)	Overall lowered height	Overall extended height		Free lift (TOF)		Approx. total wt. of standard equipped truck w/o battery		
		w/ load backrest	w/o load backrest	w/ load backrest	w/o load backrest	E60XN	E65XN	E70XN
in (mm)	in (mm)	in (mm)	in (mm)	in (mm)	in (mm)	lb (kg)	lb (kg)	lb (kg)
2-STAGE LIMITED FREE LIFT (LFL) VISTA®PLUS MAST								
118 (3009)	83 (2085)	167 (4237)	143 (3654)	5 (150)	5 (150)	7570 (3434)	7750 (3515)	7850 (3561)
126 (3209)	86 (2185)	175 (4437)	151 (3854)	5 (150)	5 (150)	7640 (3465)	7820 (3547)	7920 (3592)
130 (3309)	88 (2235)	179 (4537)	155 (3954)	5 (150)	5 (150)	7720 (3502)	7900 (3583)	8000 (3629)
2-STAGE FULL FREE LIFT (FFL) VISTA® MAST								
118 (3010)	83 (2085)	167 (4237)	144 (3655)	33 (857)	56 (1440)	7630 (3461)	7810 (3543)	7910 (3588)
126 (3210)	86 (2185)	175 (4437)	151 (3855)	37 (957)	60 (1540)	7670 (3479)	7850 (3561)	7950 (3606)
130 (3310)	88 (2235)	179 (4537)	155 (3955)	39 (1007)	62 (1590)	7810 (3543)	7990 (3624)	8090 (3670)
3-STAGE FULL FREE LIFT (FFL) VISTA®PLUS MAST								
175 (4468)	83 (2085)	225 (5696)	200 (5095)	33 (857)	57 (1458)	8050 (3651)	8230 (3733)	8330 (3778)
181 (4618)	85 (2135)	231 (5846)	206 (5245)	35 (907)	59 (1508)	8150 (3697)	8330 (3778)	8430 (3824)
187 (4768)	88 (2235)	237 (5996)	212 (5395)	39 (1007)	63 (1608)	8240 (3738)	8420 (3819)	8520 (3865)
205 (5218)	94 (2385)	254 (6446)	230 (5845)	45 (1157)	69 (1758)	8310 (3769)	8490 (3851)	8590 (3896)
223 (5668)	102 (2585)	272 (6896)	248 (6295)	53 (1357)	77 (1958)	8410 (3815)	8590 (3896)	8690 (3942)
4-STAGE FULL FREE LIFT (FFL) VISTA® MAST								
240 (6098)	84 (2133)	289 (7321)	263 (6678)	35 (910)	61 (1553)	8510 (3860)	8690 (3942)	8790 (3987)
252 (6404)	88 (2235)	301 (7627)	275 (6984)	39 (1012)	65 (1655)	8580 (3892)	8760 (3973)	8860 (4019)
264 (6710)	92 (2336)	313 (7933)	287 (7290)	43 (1113)	69 (1756)	8650 (3924)	8830 (4005)	8930 (4051)

E45-70XN BATTERY SPECIFICATIONS

BATTERY AND COMPARTMENT SPECIFICATIONS

Truck model	Width	Length	Height	"X"	"Y"	"Z"	Volts	No. of cells	Max capacity 6 hour rate	Weight	
										Min	Max
	in (mm)								amp hr (kwh)	lb (kg)	
E45-50XN 27" compartment	39.1 (992)	27.6 (700)	23.9 (607)	38.7 (983)	27.2 (691)	23.5 (597)	36	18	1100 (38.3)	2300 (1050)	3300 (1500)
							48	24	800 (37.2)		
							80	40	375 (29.3)		
E45-50XN 30" compartment	39.1 (992)	30.9 (786)	23.9 (607)	38.7 (983)	30.6 (777)	23.5 (597)	36	18	1200 (41.9)	2500 (1150)	3500 (1600)
							48	24	900 (42)		
							80	40	400 (31.2)		
E45-60XN 33" compartment	39.1 (992)	33.3 (847)	23.9 (607)	38.7 (983)	33 (838)	23.5 (597)	36	18	1300 (45.4)	2900 (1320)	3900 (1770)
							48	24	1000 (46.6)		
							80	40	450 (35.1)		
E65XN 36" compartment	39.1 (992)	36.7 (933)	23.9 (607)	38.7 (983)	36.4 (924)	23.5 (597)	36	18	1500 (52.4)	3100 (1410)	4100 (1860)
							48	24	1100 (51.1)		
							80	40	600 (46.8)		
E65-70XN 40" compartment	39.1 (992)	40 (1015)	23.9 (607)	38.7 (983)	39.6 (1006)	23.5 (597)	36	18	1600 (55.8)	3400 (1550)	4400 (2000)
							48	24	1200 (55.9)		
							80	40	600 (46.8)		

Battery type: "EO" (without cover)
Battery amp hr (kWh) capacity is max allowable per UL
Commercially available lead acid batteries may not necessarily reach these max limits
Battery roller option reduces battery compartment height to 23.3" (593mm) & max battery height to 23.0" (583mm)
Battery compartment length is measured front to rear. Battery compartment width is measured across the truck.

Battery notes - Conventional charging (BCSSBC)
Battery connector: 36-volt - gray SB®350 (Anderson Power Products® P/N 6320G1 or equivalent)
48-volt - blue SB®350 (Anderson Power Products® P/N 6321g1 or equivalent)
80-volt - black SBE®320 (Anderson Power Products® P/N E6363G1 or equivalent)
Battery lead: length 20" (508 mm), position "B", 2/0 AWG

Battery notes - Rapid/fast charging (BARFBC)
Note: A site survey is required to confirm your application is a candidate for rapid charge and to determine the battery and charger specifications required. Contact your battery and charger supplier.
Battery connector: Requires dual positive/negative cabling terminating in (2) female EBC-320 DIN connectors (Anderson Power Products® P/N A32503-0009 or equivalent)
Each individual DIN connector to include 1 red conductor to (+) and 1 black conductor to (-)
Battery lead: Length 25" (635 mm), position "b", minimum cable size 3/0 AWG

PERFORMANCE	STD	OPT
36-volt electrical system	x	
Standard performance	x	
AC traction and pump motors (completely brushless)	x	
Transistor drive and pump control	x	
Advanced VSM (vehicle system manager)	x	
Progressive thermal management system	x	
48 or 80-volt electrical system		x
PowerPlus Performance (N/A with 36-volt)		x
Reverse Speed System		x
DRIVE	**STD**	**OPT**
Smooth tread rubber drive tire and steer tire	x	
Non-marking, rubber, or lug tread tires		x
Wide tread tires		x
LIFT	**STD**	**OPT**
2-stage limited free lift (LFL) VISTA®PLUS mast* with maximum fork height of 125" (3192 mm) (E45-55XN) or 118" (4800 mm) (E60-70XN)	x	
5° forward and 5° back mast tilt	x	
2-stage full free lift (FFL) VISTA® mast* 3-stage full free lift (FFL) VISTA®PLUS mast* 4-stage full free lift (FFL) VISTA® mast*		x
Mast tilt option – 10° forward/5° back		x
Mast tilt option – 5° forward/4° back		x
Return to set tilt		x
Accumulator		x
Load weight indicator		x
HANDLING	**STD**	**OPT**
38.5" (980mm) wide Class II (E45-55XN) or Class III (E60-70XN) hook-type carriage with 38.5" (980 mm) high load backrest extension	x	
42" (1067mm) long forks	x	
Carriage with integral sideshift		x
Carriage with integral sideshifting fork positioner		x
Attachment carriages		x
ERGONOMICS	**STD**	**OPT**
12" steering wheel with integral spinner knob	x	
Non-suspension vinyl seat	x	
Black, non-cinch seat belt with Emergency Locking Retractor	x	
Foot applied/hand released park brake	x	
Power assist braking	x	
MONOTROL® foot direction control	x	
Auto Deceleration System with regenerative braking	x	
Multifunction display – Battery state of charge with low battery lift interrupt – Hour meter – Performance mode indicator – Fault indicator – 4 operator selectable, programmable performance modes	x	
Easy ingress/egress with low step height and contoured handhold	x	
Operator convenience station - storage areas, beverage & clipboard holders	x	
Adjustable tilt steering column with low profile cowl	x	
Cushioned floormat	x	
Seatside power disconnect button	x	
TouchPoint electro-hydraulic mini-lever controls with fully adjustable armrest		x
Non-suspension seat (cloth)		x
Full-suspension seat (vinyl or cloth)		x
Full-suspension swivel seat (vinyl or cloth)		x
Seatside directional control		x
Automatic electro-mechanical park brake		x

ERGONOMICS (continued)	STD	OPT
Telescopic steering column with tilt memory		x
Key switch controlled lights		x
Rear drive handle with integrated horn button		x
Mirrors – rear view or panoramic		x
Synchronous steering		x
Red, high-visibility, non-cinch seat belt with or without start interlock		x
Low mount display		x
OPERATION	**STD**	**OPT**
Battery compartment size – 27" (E45-50XN) – 33" (E55-60XN) – 36" (E65XN) – 40" (E70XN)	x	
Lift out battery extraction	x	
Standard construction	x	
UL Classification Type "E"	x	
Key switch start	x	
88.5" grid style overhead guard	x	
3-function hydraulic control valve with seatside mechanical levers	x	
Fully integrated CANbus communication	x	
On-demand power steering	x	
Hyster Stability System (HSS®)	x	
Static strap	x	
Tow pin	x	
On-board software: program, test & diagnose; password protected	x	
Electronic horn with integral relay (long life/no adjustments)	x	
Side extraction battery removal with rollers		x
Rapid/fast charge		x
Cooler/freezer package–operating temp: -20°F to +120°F		x
UL Classification Type "EE"		x
4-function hydraulic control valve		x
86.5" grid style overhead guard		x
84.1" flat plate overhead guard		x
88.5" drive-in rack grid style overhead guard		x
Keyless start (with auxiliary key switch)		x
LED and halogen work light packages		x
LED dome/reading light		x
Basic & premium LED brake/tail/back-up light packages		x
Audible alarm – reverse operation (manually adjustable to 87, 97 or 102 dB)		x
Visible amber strobe light - continuous activated, overhead guard mounted		x
Impact monitor		x
Operator password		x
Operator daily checklist		x
System monitor – hydraulic low fluid level indicator and hydraulic filter service indicator		x
Hydraulic attachment extension tubes with quick disconnect fittings		x
Fire extinguisher – 2.5 lb dry chemical		x
Hyster Reaction™		x
SUPPLEMENTAL	**STD**	**OPT**
12 month/2,000 hour full truck warranty	x	
36 month/6,000 hour powertrain warranty	x	
Operating manual	x	
ENERGY SYSTEM	**STD**	**OPT**
Lead acid	x	
Hyster Power Cellect™		x

* For more information, refer to the VISTA®PLUS mast brochure.

Hyster Company
P.O. Box 7006, Greenville, North Carolina 27835-7006

© 2024 Hyster-Yale Materials Handling, Inc., all rights reserved. Hyster and ⊞ are trademarks of Hyster-Yale Materials Handling, Inc.
Hyster products are subject to change without notice. Trucks may be shown with optional equipment.

CERTIFICATION: Hyster lift trucks meet the design and construction requirements of B56.1-1969, per OSHA Section 1910.178(a)(2), and also comply with the B56.1 revision in effect at time of manufacture. Certification of compliance with the applicable ANSI standards appears on the lift truck. Performance specifications/ratings are for truck equipped as described under standard equipment in this technical guide. Performance specifications are affected by the condition of the vehicle and how it is equipped, as well as by the nature and condition of the operating area. Specifications are subject to change and the proposed application should be discussed with your authorized Hyster Company dealer.

Part No. E45-70XN-TG | 7/2024 Litho in U.S.A. 1015HBC1SP001_E_EN-US_V4R4_07012024